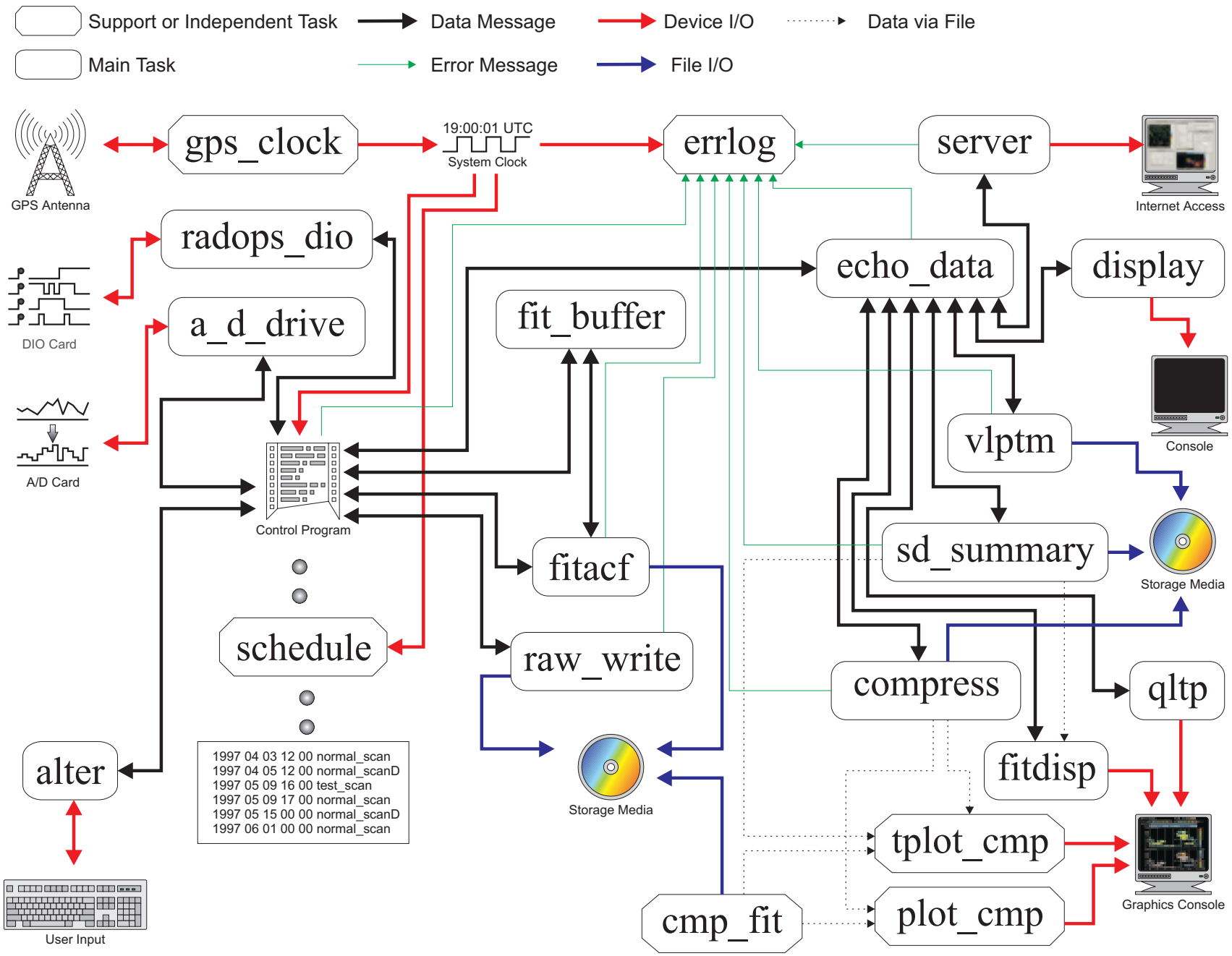
Support or Independent Task
Data Message
Device I/O
Data via File
Main Task
Error Message
File I/O
GPS Antenna
gps_clock
19:00:01 UTC
System Clock
errlog
server
Internet Access
radops_dio
DIO Card
a_d_drive
A/D Card
fit_buffer
echo_data
display
Console
vlptm
Control Program
fitacf
sd_summary
Storage Media
schedule
raw_write
compress
qltp
alter
1997 04 03 12 00 normal_scan
1997 04 05 12 00 normal_scanD
1997 05 09 16 00 test_scan
1997 05 09 17 00 normal_scan
1997 05 15 00 00 normal_scanD
1997 06 01 00 00 normal_scan
Storage Media
fitdisp
tplot_cmp
plot_cmp
cmp_fit
Graphics Console
User Input